Optional Attachment

Wheel Loader

Motor Grader

Excavator

Backhoe Loader

Vibratory Roller

Truck Mounted Crane

Bulldozer

Paver

Skid Steer

国机重工集团国际装备有限公司

SINOMACH-HI INTERNATIONAL EQUIPMENT CO., LTD.

Add:No.898 West Huang He Road, Changzhou city, Jiangsu Province, China

PC:213136

Tel:+86 18206118629

Https://www.cnchanglin.com/

E-mail:sales8@changlin.com.cn

国机重工系列挖掘机产品不断更新和改造中，我们保留未事先告知用户更改参数和设计的权利，文中插图不一定是该机型的标准款，照片中产品外观与实际机型可能存在差异，以实物为准。

Products elements and technical parameters are subject to change without notice.

CHANGLIN

液压挖掘机系列

Hydraulic Excavator

ZG520

Rated output：280kW/2000rpm

Operation mass：50460kg

Bucket capacity：3.2m³

Equip the World
Create Value

国机重工集团国际装备有限公司

SINOMACH-HI INTERNATIONAL EQUIPMENT CO.,LTD.

装备世界 · 创造价值

Equip the world and create value

更可靠

More reliable

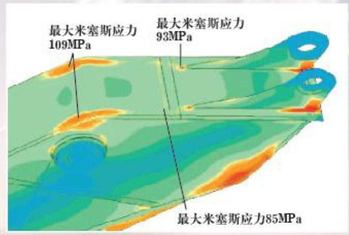

通过对动臂及斗杆的有效元分析，
确保了产品的可靠性

Through the effective meta-analysis of the moving arm and bucket bar. Ensures the reliability of the product.

更省油

Lower consumption

模块化设计，故障、油耗降低，
动力依旧澎湃

Modular design. Failure, lower fuel consumption, still powerful.

C型配置恒立液压系统
真正静音设计 力与控制的完美结合

Equipped with INLINE hydraulic system;
Truly silent design for the perfect combination of power and control.

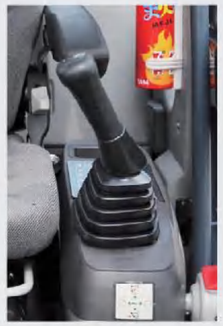

●高度灵敏的先导阀
Sensitive joystick

●宽大的脚部空间
Broad foot space

●驾驶室顶部天窗
Roof scuttle in cab

●可调式悬浮座椅
Adjustable suspension
GRAMMER seat

超强、高效的发动机

· 适应严苛工况条件，高强度，重负荷，作业能力强；
· 康明斯新一代大功率电喷发动机，动力强劲，燃油消耗低，可靠性高；
· 整体模块化设计，总零件数量少，故障率低；
· 直列式燃油泵可产生较高的喷油压力，使燃烧更加清洁；
· 标配油浴式预滤器和唐纳森高效空滤器,保证进气的高清洁度;
· 配置独立的液压油散热器和高效直连的发动机散热器，超强的散热系统保证机器在炎热的夏季也能正常使用，维护保养方便；
· 采用双级燃油滤清器，外加油水分离器，确保燃油的清洁度，延长发动机的使用寿命。

Powerful and high-efficiency engine

· Adapt to various working conditions such as high strength and heavy load, with strong working ability.
· Cummins new-generation high-power EFI engine, with strong power, low fuel consumption and high reliability.
· The in-line fuel pump can generate high injection pressure, which makes the combustion cleaner.
· Standardly equipped with oil bath pre-filter and Donaldson high-efficiency air filter to ensure high cleanliness of intake air;
· Equipped with independent hydraulic oil radiator and high-efficiency direct-connected engine radiator to ensure the machine can be used normally even in hot summer;
· Adopting double-stage fuel filter, plus oil-water separator to ensure the cleanliness of fuel and prolong the service life of the engine.

安全、舒适的驾驶空间

· 采用安全可靠的新型驾驶室， 配置全自动冷暖空调；
· 配备高分辨率、高亮度的8寸彩色防炫目监控仪表，智能电子监控系统，具备整车保养信息提示、故障的自诊断和报警等多种功能；
· 宽大舒适的脚步空间，可调节悬浮式格拉默座椅，六点硅油减震器布置，操作舒适，安全可靠。

Safe and comfortable cab

· Equipped with high-resolution, high-brightness 8-inch color anti-glare monitoring instrument, intelligent electronic monitoring system, with vehicle maintenance information prompts, fault self-diagnosis and alarm and other functions;
· Safe and reliable new cab with automatic air conditioning;
· Assisted human oriented design make operator comfortable, operation safe and reliable.

● 油缸缸体内面，经过滚光加工，达到了良好的粗糙度及表面硬度，提高了耐磨性。
The cylinder inside is applied roll finishing, and reaches excellent roughness and hardness, which increases its resistance.
● 活塞杆镀覆镍硬铬，提高了防锈、耐磨以及耐伤性能。
Chrome and nickel plated piston rod acquires better rust protection and resistance.

● 铲斗使用加厚钢板，铲齿有效部分厚度和长度均得到有效加强，提高了铲齿的耐磨寿命。
Steel plate of bucket is thickened. The teeth have more wearing resistance due to their valid parts are thickened and lengthened.
● 连接销应用烧结衬套，提高了耐磨性。
Connecting pin applies sintered sleeves and adds its resistance.

● 加强的箱式结构车架全部由低应力，高强度钢板焊接而成
Strengthened chamber frame is totally welded by low stress and high strength steel plate
● 标配全护板
Standard guard board

高强度、快速的工作装置

· 采用加强型动臂、斗杆，连接部位采用整体高强度低碳铸钢件，减少焊接应力，箱式大截面结构，其内部加焊抗扭板，润滑油道的设计便于加注润滑油；
· 动臂、斗杆焊缝四周皆采用坡口焊接，焊缝强度高，所有焊缝皆采用超声波探伤检查；
· 采用树脂垫片调整间隙，减少了对结构件基体的磨损，并使噪音大大降低；

High-load and efficient work device

· Strengthened boom and arm are applied. Connecting parts are made of high stress low carbon cast steel;
· Groove welding is applied for boom and arm, decreasing the welding stress, enhancing the welding strength, which be detected by supersonic device;
· Oily resin gaskets are applied for clearance adjustment, which reduce the wear of substrate of structure and noise of operation;

灵活、可靠的液压系统

· 新型的液压系统，大排量主泵，大流量主阀，通流面积大，压力损失小，流量分配更合理，协调性更好，操作更加轻松；
· 多路阀独特新型阀芯设计，显著提高精细操作性能；
· 具有动臂优先、斗杆再生、防沉降、直线行走、铲斗合流功能，极具节能效果；
· 配备大缸径油缸，优化各关键铰点的布置，提升整机挖掘力；
· 新一代控制系统，根据工况需要智能调节液压吸收功率，最优化的系统匹配，保证整机的综合性能充分发挥。

Flexible and reliable hydraulic system

· New type hydraulic system, large displacement main pump, large flow main valve, large flow area, small pressure loss, more reasonable flow distribution, better coordination and easier operation;
· The unique design spool of multi-way valve makes the operation more accurately;
· High pressure cylinder is applied. And built-in buffer valve in it, which delay shock;
· Equipped with large bore cylinders, optimising the arrangement of key hinge points to enhance the digging force of the whole machine.
· New generation control system intelligently adjusts the hydraulic absorption power according to the working conditions, and optimizes the system matching to ensure the full performance of the whole machine.

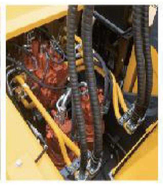

新型的液压系统，大排量主泵，大流量主阀，通流面积大，压力损失小，流量分配更合理，协调性更好，操作更加轻松。

New type hydraulic system, large displacement main pump, large flow main valve, large flow area, small pressure loss, more reasonable flow distribution, better coordination and easier operation.

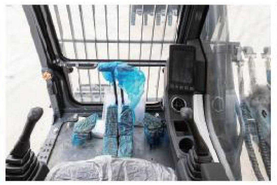

配备高分辨率、高亮度的 8 寸彩色防炫目监控仪表，智能电子监控系统，具备整车保养信息提示、故障的自诊断和报警等多种功能。

Equipped with high-resolution, high-brightness 8-inch color anti-glare monitoring instrument, intelligent electronic monitoring system, with vehicle maintenance information prompts, fault self-diagnosis and alarm and other functions;

康明斯新一代大功率电喷发动机，动力强劲，燃油消耗低，可靠性高；

UK Cummins' new generation of high-power EFI engines with strong power, low fuel consumption and high reliability.

大容量铝制冷却装置在满负荷和连续作业的情况下，也能起到良好的散热效果。

Under the condition of full load and continuous operation, the large capacity aluminum cooling device can also play a good heat dissipation effect.

方便，低耗的维护保养

- 强大的GPS网络服务平台，及时反馈各类车况信息，并提供解决方案。
- 方便检查，快速清洁的滤清器。
- 液压油滤芯耐久性更强，延长了更换周期。

After-sales

SINOMACH provides specialized technical assistance and original spare parts that are available for you whenever you need them.

坚实、稳定的行走结构

- 加强的箱式结构车架全部由低应力、高强度钢板焊接而成；
- 履带板采用优质合金钢制成，使用寿命更长；
- 采用进口行走马达和减速器，内置缓冲启动阀，行走启动更平稳；
- 新型常闭式闭锁装置，提高了坡道制动安全性；
- 内设过载溢流阀，防止过载和冲击压力，并在停止行走作业时防止冲击载荷的出现；
- LC式加长底盘使机器稳定性更佳；
- 回转平台侧梁采用加大截面高度，提高强度和刚度，精心布置，合理调配整机重心，加强整机工作时的稳定性；

Solid and stable traveling structure

- Whole strengthen box-type frame welded by low stress and high strength steel plate.
- Track board made of high quality alloy steel ensures the long service life.
- Built-in buffer starting valve makes travel and start more smooth and steady.
- New normally closed type locking device improves braking safety at ramp.
- Built-in overload relief valve prevents overload, shock pressure and the emergence of impact load on stopping traveling operation.

外形尺寸 *Dimensions(mm)*

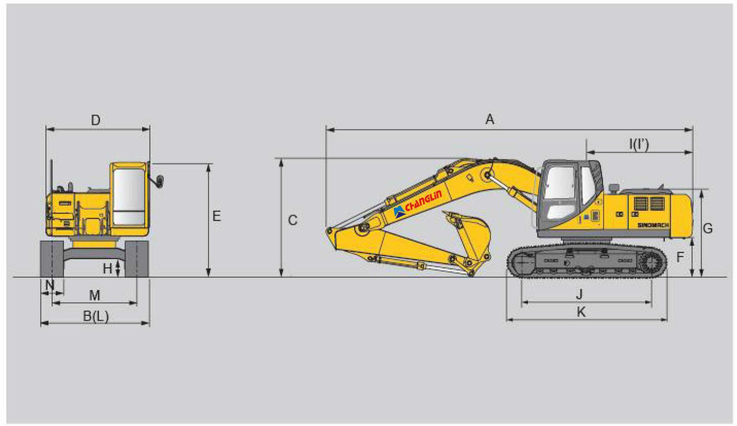

作业范围 *Working Range*

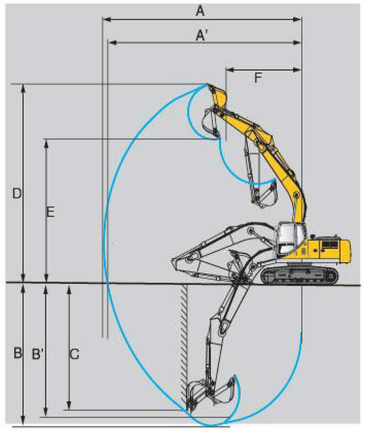

Item		Unit(mm)			
A Overall length	11657	I Length of platform	3740	A Max. digging reach	10922
B Overall width	3340/3562	I' Rear swing radius	3780	A' Max. digging depth	10691
C Overall height of boom	3998	J Track wheelbase distance	4470	B Max. digging depth	6453
D Width of platform	3214	K Chassis length	5595	B' Max. digging depth	6280
E Overall height of cab	3438	L Chassis width	3340/3562	C Max. vertical wall digging depth	5663
F Ground clearance of counterweight	1276	M Track gauge	2740	D Max. digging height	11020
G Height of engine cover	2918	N Standard width of track shoe	600	E Max.dumping height	7438
H Min.ground clearance	555			F Min. swing radius	4740

Specifications	
Operating weight	50460kg
Standard bucket capacity	3.2m³
Arm length	2500mm
Boom length	6550mm
Engine	
Model	Cummins QSM11(Ⅲ)-C375
Type	6-cylinder in-line, four-stroke turbocharger
Power	280KW/2100rpm
Max.torque	1898/1300rpm
No.of cylinders	6
Displacement	10.8L
Hydraulic system	
Main pump:	
Type	Variable displacement axial piston pumps
Max.displacement	2×425L/min
Working pressure	34.3Mpa
Hydraulic motor:	
Swing	Fixed displacement axial piston motor
Travel	Variale displacement axial piton motors
Performance	
Swing speed	9.4rpm
Max. travel speed H/L	5.5/3.1km/h
Gradeability	35°（70%）
Max. digging force of bucket	290kN
Max.digging force of arm	270kN
Ground pressure	85kpa
Tank capacity	
Fuel tank capcity	710L
Hydraulic tank capacity	410L

*所有测量数值均为近似值